Rubino Bath 1800

PB1045

Back to Wall Angled Rectangular Bath

BATH FINISHES:

- matt white
- matt black
- glossy white
- glossy black

capacity: 332L | weight empty: 153kg | weight full: 485kg

bathtub can come in combination of finishes

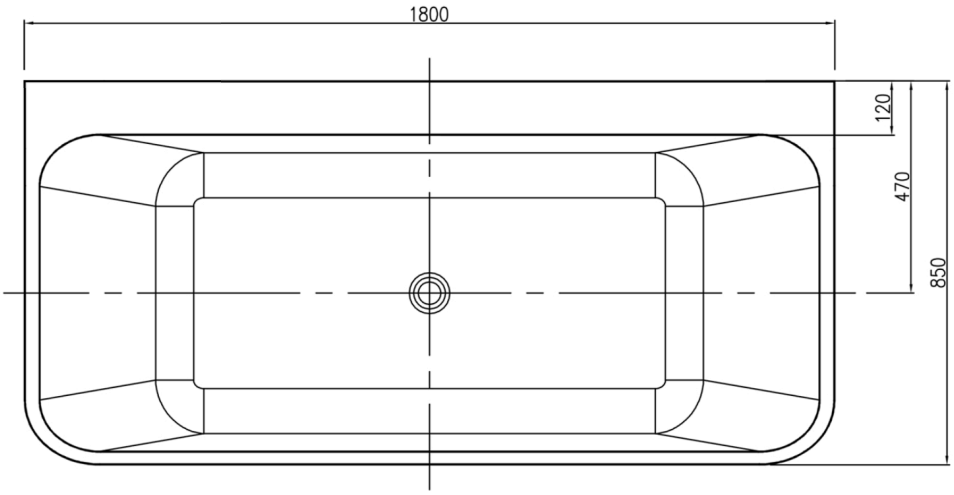

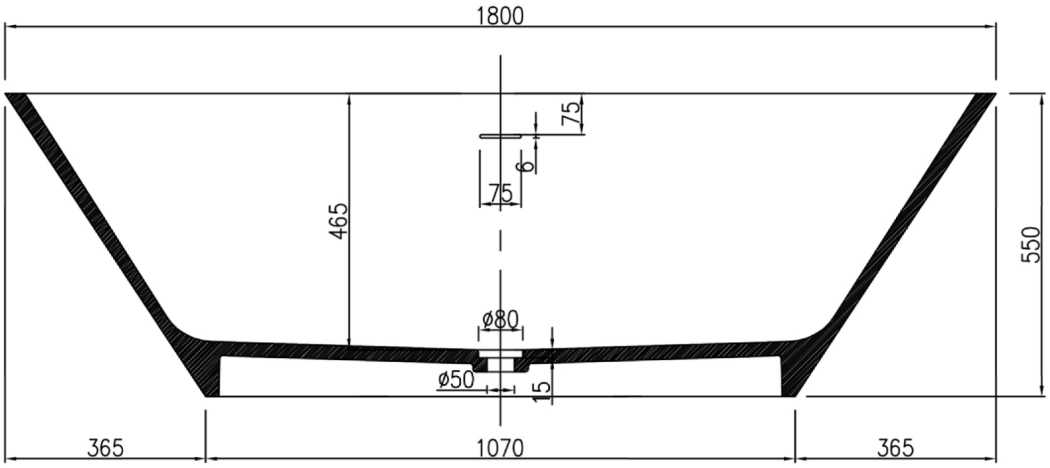

20 Hutt Road, Thorndon, Wellington
sales@bellocasa.co.nz T: 04 474 0810